Maruti Enterprise
65, The Grand Vishala Estate, Odhav-Vastral Ring Road,Nr.Karnavati Estate, Odhav,Ahmadabad-382415, Gujarat, India.
M : +91 98982 68698
E : info@meindia.net.in W : www.meindia.net.in

Do The Best

Rod Control Series - MS829 WT

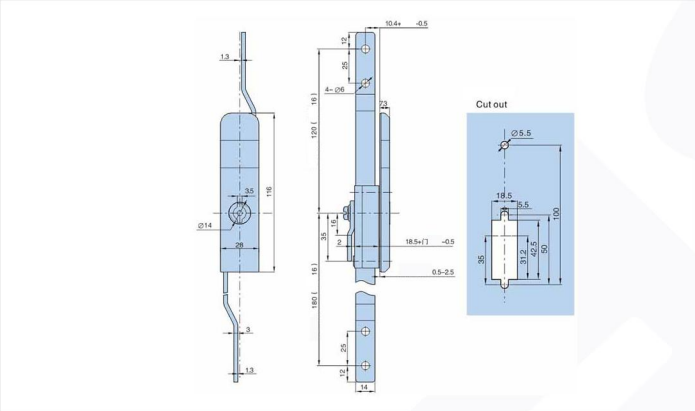

Features :

- Material:ABS panel、zinc die-casting rod control box Zinc plating cam, fixing parts, M.S.nickel plating driving rod;
- Panel thickness:0.5~2.5mm
- Remark: cam cutout 7×7

Meterial :

- Plastic

Surface treatment :

- Plastic Spray

Product Specification

Product no.	Weight	Lot
MS829WT	608	60
MS829	602	60

Manufacturer & Importer

Panel Door Lock / Panel Door Hinges / Latches / Door Handles / Blind Rivet Nut / Mono-Bolt Rivets
Self Clinching Fasteners / Door gaskets / Fan Filters / Drawer Sliding Chanel