Maruti Enterprise
65, The Grand Vishala Estate, Odhav-Vastral Ring Road,Nr.Karnavati Estate, Odhav,Ahmadabad-382415, Gujarat, India.
M : +91 98982 68698
E : info@meindia.net.in W : www.meindia.net.in

Do The Best

Rod Control Series - MS100-3A

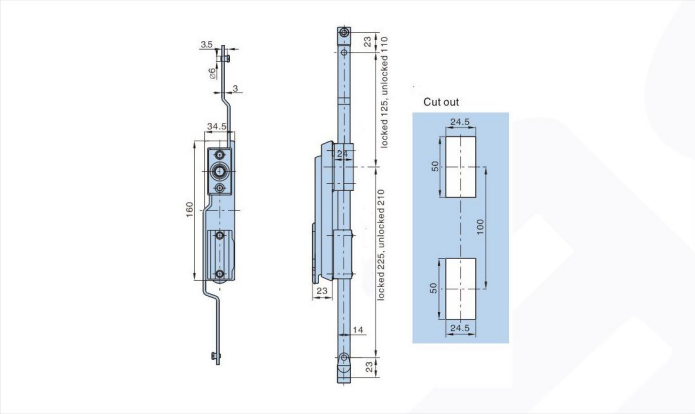

Features :

- Material: PA66 body,brass shaft,Zinc plating shaft,-cam.Nickel plating driving rod
- Finish :Matt black
- Panel thickness:1~3mm
- Remark: cam cutout 8×8

Meterial :

- Plastic

Surface treatment :

- Plastic Spray

Product Specification

Product no.	Weight	Lot
MS100-3A	366	50