Maruti Enterprise
65, The Grand Vishala Estate, Odhav-Vastral Ring Road,Nr.Karnavati Estate, Odhav,Ahmadabad-382415, Gujarat, India.
M : +91 98982 68698
E : info@meindia.net.in W : www.meindia.net.in

Do The Best

Flat lock Serise - MS4090Z-1-1

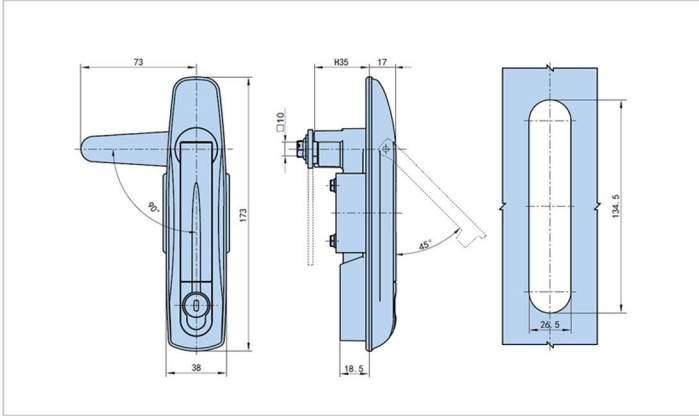

Features :

- Material:aluminum alloy for the housing and big cylinder shell,zinc alloy for the handle,rotate axis and smal cylinder shell,A3 for the mounting plate and cam.
- Finish:matt black for the housing and lock back,bright chrome for the big and small cylinder shell,-blue-white zinc plating.
- Funtion:quick unlocking,easy installing,replace the cam can switch to single-point type and three-point type.
- Panel thickness:1-10MM
- Remark:10X10 cut out

Meterial :

- Zinc alloy

Surface treatment

- Plastic Spray

Product Specification

Product No	Weight	Lot
MS4090Z-1-1	453.6	50

Manufacturer & Importer

Panel Door Lock / Panel Door Hinges / Latches / Door Handles / Blind Rivet Nut / Mono-Bolt Rivets
Self Clinching Fasteners / Door gaskets / Fan Filters / Drawer Sliding Chanel