Maruti Enterprise
65, The Grand Vishala Estate, Odhav-Vastral Ring Road,Nr.Karnavati Estate, Odhav,Ahmadabad-382415, Gujarat, India.
M : +91 98982 68698
E : info@meindia.net.in W : www.meindia.net.in

Do The Best

The connecting rod lock Serise - MS486

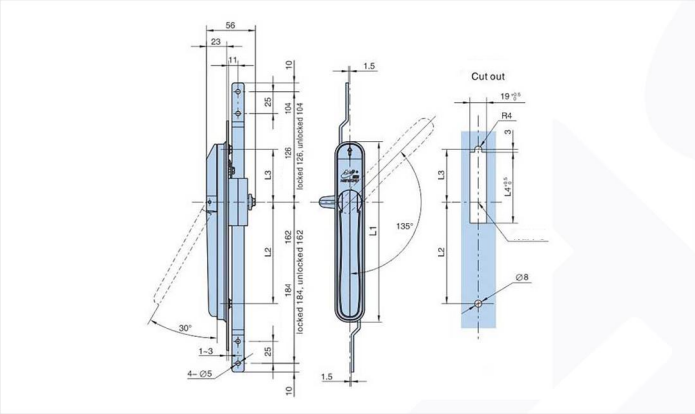

Features :

- Material:zinc die-casting body , Zinc plating cam、fixing parts、 M.S.nickel plating driving rod
- Finish:RAL7035 powder coated
- Panel thickness:1~3mm
- Remark: cam cutout 7×7.

Meterial :

- Zinc alloy

Surface treatment

- Plastic Spray

Product Specification

	L1	L2	L3	L4	Weight	Lot
MS486-1-1	221	122.5	63.5	85	675	50
MS486-2-1	206	116	60	81	629	50
MS486-3-1	186	104	60	81	617	50