Maruti Enterprise
65, The Grand Vishala Estate, Odhav-Vastral Ring Road,Nr.Karnavati Estate, Odhav,Ahmadabad-382415, Gujarat, India.
M : +91 98982 68698
E : info@meindia.net.in W : www.meindia.net.in

Do The Best

Flat lock Serise - MS609-1A-1

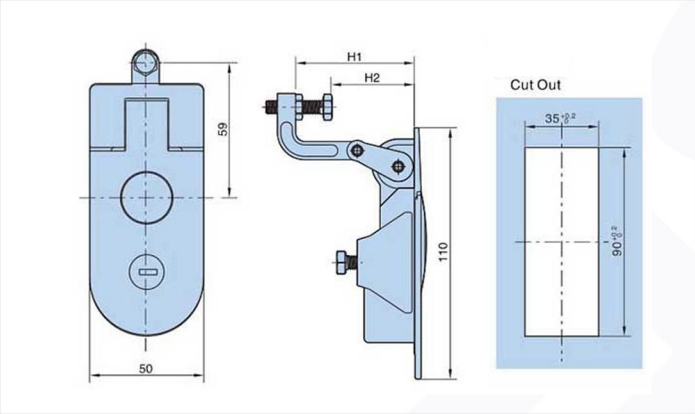

Features :

- Material:Zinc die-casting
- Finish: Black powder coated
- Panel thickness:1~5mm

Meterial :

- Zinc alloy

Surface treatment

- Electroplate

Product Specification

Dimensions		Product Number					
H1	H2	With key	Weight	Lot	W/O key	Weight	Lot
21	0-15	MS609-1-1	357	50	MS609-1-1	350	50
52	35-45	MS609-1A-1	357	50	MS609-1A-1	350	50
67	45-60	MS609-1B-1	357	50	MS609-1B-1	350	50
35	15-30	MS609-1D-1	357	50	MS609-1D-1	350	50