Maruti Enterprise
65, The Grand Vishala Estate, Odhav-Vastral Ring Road,Nr.Karnavati Estate, Odhav,Ahmadabad-382415, Gujarat, India.
M : +91 98982 68698
E : info@meindia.net.in W : www.meindia.net.in

Do The Best

The rotary bolt lock Serise - MS7068Z-1-1

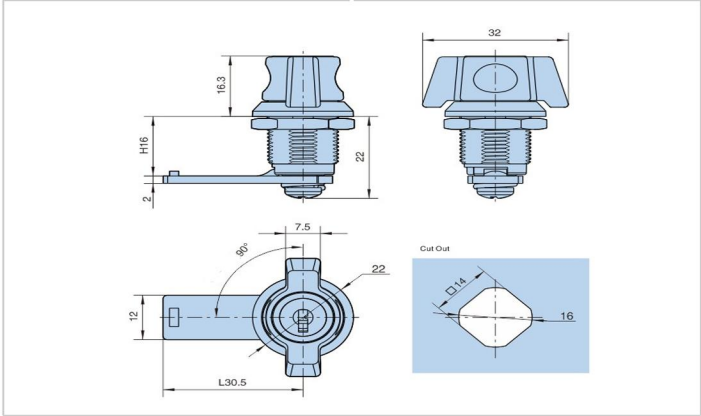

Features :

- Material:Zinc die-casting body and insert A3 cam
- Finish:Electrophoresis Back
- Panel thickness:1~5mm

Meterial :

- Zinc alloy

Surface treatment

-

Product Specification

Product No	Weight	Lot
MS7068Z-1-1	62.5	400