Maruti Enterprise
65, The Grand Vishala Estate, Odhav-Vastral Ring Road,Nr.Karnavati Estate, Odhav,Ahmadabad-382415, Gujarat, India.
M : +91 98982 68698
E : info@meindia.net.in W : www.meindia.net.in

Do The Best

Cam Lock Serise - MS711-1-1

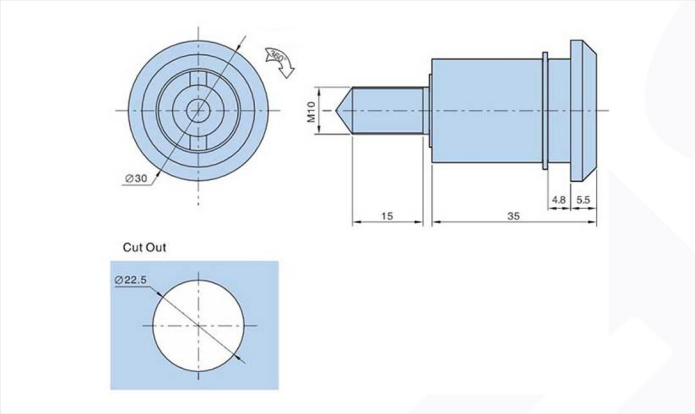

Features :

- Material:Zinc die-casting body and key,PA-6pull-tab, Zinc plating cam, fixing parts;
- Finish: Bright chrome plating
- Panel thickness:1.5~8mm
- Remark: compression latch 6mm pull-up

Product Specification

Product Number											
Black powder coated						Bright chrome plating					
	Weight	lot		Weight	lot		Weight	lot		Weight	lot
MS711-1-1L.3	95.5	200	MS711-1-1R.3	98.5	200	MS711-1-1L.1	95.5	200	MS711-1-1R.1	98.5	200
MS711-4-1L.3	98.5	200				MS711-4-1L.3	98.5	200			

Manufacturer & Importer
Panel Door Lock / Panel Door Hinges / Latches / Door Handles / Blind Rivet Nut / Mono-Bolt Rivets
Self Clinching Fasteners / Door gaskets / Fan Filters / Drawer Sliding Chanel