Maruti Enterprise
65, The Grand Vishala Estate, Odhav-Vastral Ring Road,Nr.Karnavati Estate, Odhav,Ahmadabad-382415, Gujarat, India.
M : +91 98982 68698
E : info@meindia.net.in W : www.meindia.net.in

Do The Best

Plane lock Serise - MS739

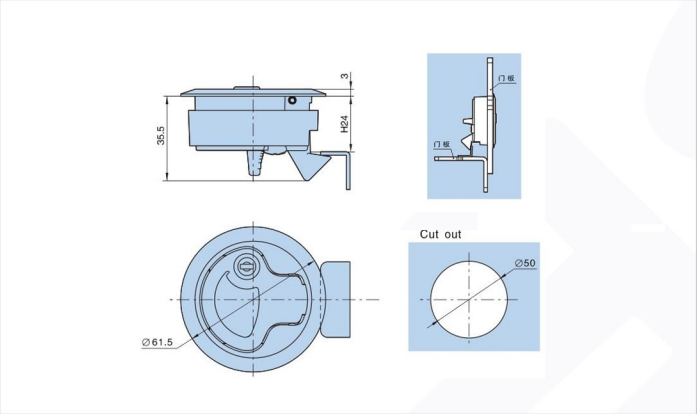

Features :

- Material:Zinc die-casting housing、 Bracket and handle,PA-6 insert
- Finish: bright chrome plated
- Panel thickness:1~6mm

Meterial :

- Zinc alloy

Surface treatment

- Electroplate

Product Specification

Product Number	Weight	Lot
MS739-2	209.5	100

Manufacturer & Importer

Panel Door Lock / Panel Door Hinges / Latches / Door Handles / Blind Rivet Nut / Mono-Bolt Rivets
Self Clinching Fasteners / Door gaskets / Fan Filters / Drawer Sliding Chanel