Maruti Enterprise
65, The Grand Vishala Estate, Odhav-Vastral Ring Road,Nr.Karnavati Estate, Odhav,Ahmadabad-382415, Gujarat, India.
M : +91 98982 68698
E : info@meindia.net.in W : www.meindia.net.in

Do The Best

Cam Lock Serise - MS816-2

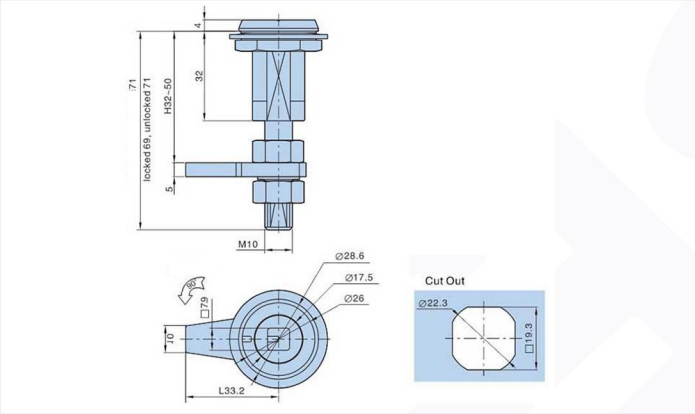

Features :

- Material:Zinc die-casting body,Zinc plating cam
- Finish: Black powder coated
- Panel thickness:1~8mm
- Remark:compression Latch,7mm pull-up

Meterial :

- Zinc alloy

Surface treatment

- Plastic Spray

Product Specification

Product no.	Weight	Lot
MS816-2	110	200

Manufacturer & Importer

Panel Door Lock / Panel Door Hinges / Latches / Door Handles / Blind Rivet Nut / Mono-Bolt Rivets
Self Clinching Fasteners / Door gaskets / Fan Filters / Drawer Sliding Chanel