Maruti Enterprise
65, The Grand Vishala Estate, Odhav-Vastral Ring Road,Nr.Karnavati Estate, Odhav,Ahmadabad-382415, Gujarat, India.
M : +91 98982 68698
E : info@meindia.net.in W : www.meindia.net.in

Do The Best

The connecting rod lock Serise - MS825-1-1

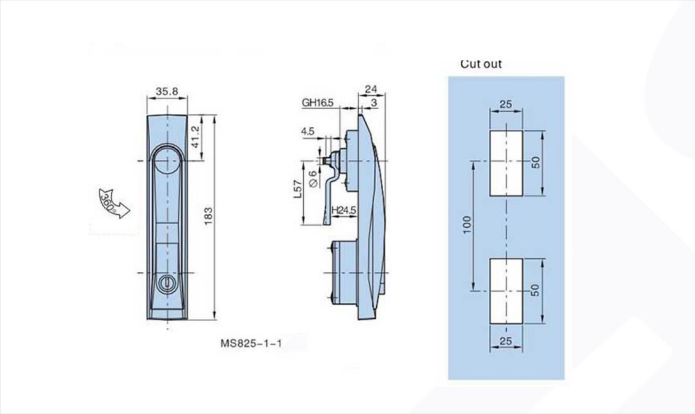

Features :

- Material:PA66 lock body,brass shaft,Zinc plating cam
- Panel thickness;1~2mm
- Remark: 90 °& 360° rotate angle are available

Meterial :

- Plastic

Surface treatment

- Plastic Spray

Product Specification

Insert type	Product no.											
	One point lock (with cam without rod)				Two point lock (with rod without cam)				three point lock (with cam and rod)			
	Matt black	Soft touch	weight	lot	Matt black	Soft touch	weight	lot	Matt black	Soft touch	weight	lot
K0100(A)	Ms825-1-1A	Ms825-2-1A.6	309	50	Ms825-1-2A	Ms825-2-2A.6	439	50	Ms825-1-3A	Ms825-1-3A.6	496	50
K0133(B)	Ms825-1-1B	Ms825-2-1B.6	315	50	Ms825-1-2B	Ms825-2-2B.6	445	50	Ms825-1-3B	Ms825-1-3B.6	502	50